ELECTRODYNAMICS OF A COAXIAL OPEN CAVITY WITH A REFLECTIVE DIFFRACTION GRATING

Yu. A. Pirogov and N. F. Ryapolov

Vestnik Moskovskogo Universiteta. Fizika,
Vol. 35, No. 1, pp. 15-24, 1980

UDC 621.414

Theoretical and experimental studies are presented on a coaxial cavity with an external focusing mirror and an internal grating of cylindrical or conical shape. Expressions are derived for the amplitudes of the incident wave and of the spatial harmonics. Patterns have been derived for the distributions of radially propagating modes with various numbers of half-waves along the z axis. Measurements have been made on the slow-wave properties of a cylindrical diffraction grating in the cavity.

Open cavities with planar gratings have been discussed in detail in the literature. Such open systems are widely used in quasioptics, in quantum-mechanical devices, and in diffraction electronics, in particular as resonant systems for diffracted-radiation generators such as the orotron, etc. [1, 2]. The diffracted radiation in a diffraction generators with a flat electron beam passing through a flat ribbed structure is partly converted to the inherent field of the open cavity.

Various applications are made of coaxial cavities with focussing mirrors in radiophysics; such cavities are extremely promising for use as tuned systems in diffraction generators [3, 4]. A coaxial orotron eliminates the losses occurring in planar models on account of the special direction pattern in the diffracted radiation. The basic feature of a coaxial orotron is the large area of interaction between the electron beam and the field near the diffraction grating, which increases the useful power. A tubular electron beam allows one to avoid the occurrence of fields of other polarizations and also phenomena associated with edge effects. The latter feature makes it possible to produce pure one-mode beams of diffracted radiation, which increases the efficiency.

1. ANALYSIS OF A COAXIAL CYLINDRICAL SYSTEM WITH A DIFFRACTION GRATING BY THE PARTIAL-REGION METHOD

Considerable interest attaches to the radial modes when coaxial cavities are used in diffraction electronics, particularly those with a longitudinal component for the electric field vector. It is very difficult to describe the wave field in a coaxial resonant system with an annular diffraction grating, and the current theory has no methods of rigorous solution.

One method of approximate treatment for such systems is to introduce impedance-type boundary conditions for the field near the structure [5]; however, it is complicated to define such impedance conditions in any particular approximation, and this is an independent problem in diffraction theory. Another approx-

© 1980 by Allerton Press, Inc.

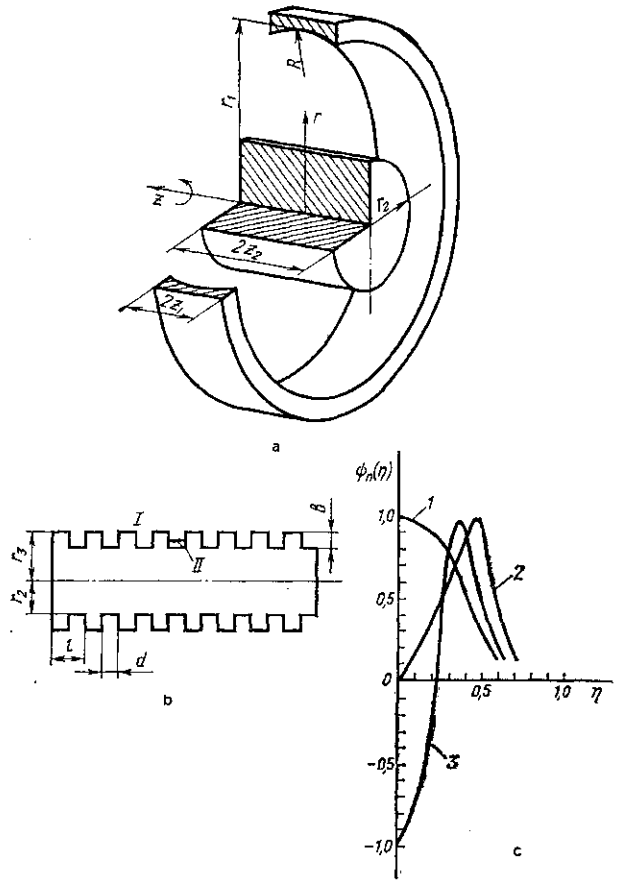

Fig. 1. Open coaxial cavity (a), diffraction structure with ring grooves (b), and field distribution along the axis at the surface of the reflector (c); n = 0 (1), 1 (2), 2 (3); $\eta = z/z_1$; $c = z_1^2 k/R = 25$.

imate method of researching these complex resonant systems with anisotropic structures involves separate consideration of the structure of the cavity field and of the scattering of this field at the grating. It is assumed that the grating interacts only weakly with the field characteristics of the open cavity and merely alters the effective distance between the mirrors.

The field in a coaxial cavity formed by an external focussing mirror and an internal cylindrical mirror (Fig. 1a) can be represented in a (r, φ, z) cylindrical coordinate system as the superposition of radially propagating ray modes, which are similar to the axially propagating modes in cavities of Fabry-Perot type, so the definition of the inherent types for a coaxial open cavity is as for a quasiplanar system and amounts to solving a homogeneous integral Fredholm equation of the second kind [6]. In a semiconfocal cavity, where the radius of curvature R of the external mirror is $2(r_1-r_2)$ in the plane φ = constant, the solution can be expressed via standard spheroidal wave functions [6].

We use the gaussian-beam approximation with the concept of wave beam half-width

$$W(r) = W_0 \left\{ 1 + \left[\frac{2(r - r_2)}{kW_0^2} \right]^2 \right\}^{1/2}$$

and the radius of curvature of the wave front

$$\rho(r) = (r - r_2) \left\{ 1 + \left[\frac{kW_0^2}{2(r - r_2)} \right]^2 \right\}$$

(see [7]) to obtain an expression for the components of the electromagnetic field of the wave beam in the volume of the cavity $r_2 \leq r \leq r_1$ in the following form by solving the corresponding integral equation:

$$\Phi_{mn}(\varphi, r, z) = \text{const} \sqrt{\frac{W_0}{W(r)}} \frac{H_m^{(1)}(kr)}{H_m^{(1)}(kr_2)} \text{He}_n \left(\sqrt{\frac{k}{r_1 - r_2}} z \right) \times$$
$$\times e^{jm\varphi} e^{-z^2/W^2(r)} \exp \left\{ -j \left[\frac{kz^2}{2\rho(z)} - \frac{1}{2} \operatorname{arctg} \frac{2(r - r_3)}{kW_0^2} \right] \right\}, \quad (1)$$

where W_0 is the minimal half-width of the beam for $r = r_2$, $H_m^{(1)}(kr)$ is a Hankel function of the first kind, $\text{He}_n \left(\sqrt{\frac{k}{r_1 - r_2}} z \right)$ are Hermitian polynomials, $k = \omega/c$, and m and n are azimuthal and longitudinal indices that define the numbers of half-waves along the φ and z coordinates, respectively. Expression (1) has been written for a wave converging to the axis (a divergent wave is described by Hankel functions of the second kind $H_m^{(2)}(kr)$). The azimuthal field variation is described by the factor $e^{jm\varphi}$, while the second exponential factor gives the field distribution in the z direction and the third defines the radial phase shift. Figure 1c shows field distributions in z at the surface of the mirror derived from (1) for the first three modes m = 0 and n = 0, 1, 2.

The incident wave has a quasicylindrical front directly at the surface of the diffraction structure, and the expression for the field in the fundamental mode (m = n = 0) is then put as

$$E_z = \text{const} \frac{H_0^{(1)}(kr)}{H_0^{(1)}(kr_2)} \exp \left\{ -\frac{z^2}{W_0^2} \right\};$$
$$H_\varphi = \text{const} \frac{j}{\sqrt{\frac{\mu}{\varepsilon}}} \frac{H_1^{(1)}(kr)}{H_0^{(1)}(kr_2)} \exp \left\{ -\frac{z^2}{W_0^2} \right\}. \quad (2)$$

In describing the excitation of an annular diffraction structure by radial modes in such a cavity we have to determine the field scattered by the grating, which satisfies the following: 1) a homogeneous Helmoltz equation in the relevant region of space, apart from the boundary surfaces, 2) the boundary conditions at the surface of the ideally conducting components, and 3) the condition for finite energy in a bounded region of space. It is found [8] that the diffraction of a wave beam at a periodic structure may be referred to the scattering of waves at the grating that are spectral components of the beam. We used the method of partial regions [9, 10] to determine the scattered field and consider an ideally conducting annular diffraction structure with parameters l (period), d (width) and b (depth of grooves) (as in Fig. 1b).

We represent the field of the wave beam in region I as a superposition of

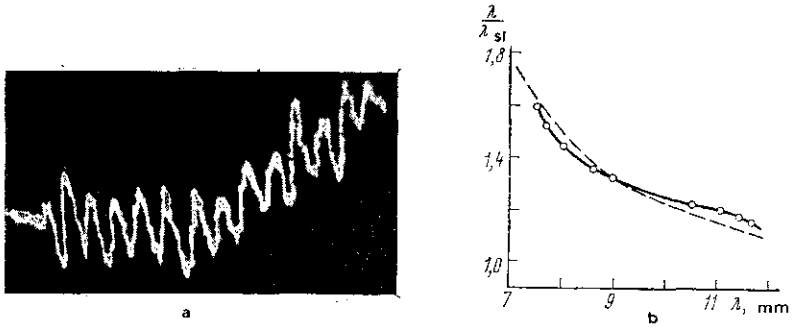

Fig. 2. Standing surface wave (a) and dispersion characteristic of the structure (b) with parameters l = 2 mm, b = 1.2 mm, and d = 1.5 mm; the dashed line is the theoretical curve for a planar grating.

cylindrical waves incident on the reflecting diffraction grating. When the functions of (2) are resolved into an angular spectrum in terms of cylindrical waves, the Fourier transformation for H_φ takes the form

$$H_\varphi = \int_{-\infty}^{\infty} f_0(h)\, H_1^{(1)}(\gamma r)\, e^{-jhz}\, dh, \tag{3}$$

$$f_0(h) = \frac{1}{2\pi}\,\frac{1}{H_1^{(1)}(\gamma r)} \int_{-z_2}^{+z_2} \frac{j}{\sqrt{\frac{\mu}{\varepsilon}}}\,\mathrm{const}\,\frac{H_1^{(1)}(kr)}{H_0^{(1)}(kr_2)}\, e^{-\frac{z^2}{W_0^2}+jhz}, \tag{4}$$

where $f_0(h)$ is the amplitude function for the incident wave, h is the propagation constant along the z axis, and γ is the radial wave number, which is defined by

$$\gamma = \begin{cases} +\sqrt{k^2-h^2}, & h^2 \leqslant k^2; \\ -j\sqrt{k^2-h^2}, & h^2 > k^2. \end{cases}$$

The azimuthal inhomogeneity in the diffraction structure and incident wave mean that the magnetic-field vector in the reflected wave also has only a H_φ component. The diffraction is produced by a periodic structure, so the scattered field should be defined as a Fourier series [8]:

$$H_\varphi^{sc} = j\sqrt{\frac{\varepsilon}{\mu}}\, f_0^-(h)\, H_1^{(2)}(\gamma r) + \sum_{\nu=1}^{\infty} j\sqrt{\frac{\varepsilon}{\mu}}\, f_\nu(h)\, K_1(|q_\nu|r)\cos\frac{2\pi\nu}{l}z, \tag{5}$$

where $q_\nu = \sqrt{k^2-\left(\frac{2\pi\nu}{l}-h\right)^2}$, $f_0^-(h)$, $f_\nu(h)$ are coefficients in the expansion that define respectively the amplitude of the reflected wave and the amplitudes of the spatial harmonics, while $K_1(|q_\nu|r)$ are MacDonald functions. All harmonics with numbers $\nu \neq 0$ are slow surface waves that die away as we recede from the surface of the structure. The electric field components are derived from Maxwell's equations.

The complete field above the diffraction structure (region I) is the sum of

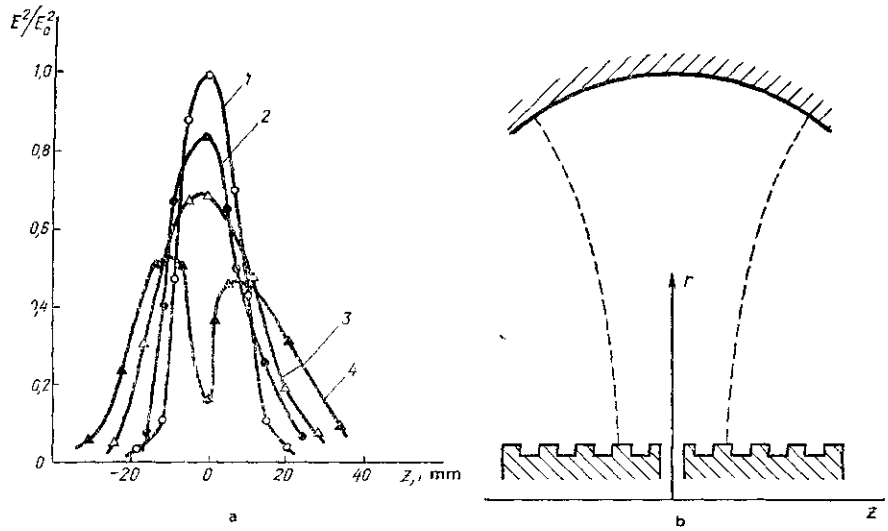

Fig. 3. The z dependence of E^2 (a) and gaussian beam in the plane φ = constant (b): r = 53 (1), 65 (2), 83 (3) and 95 (4) mm.

the incident wave, the reflected wave, and a set of spatial harmonics:

$$H_\varphi^I = j\sqrt{\frac{\varepsilon}{\mu}}\, f_0(h) H_1^{(1)}(\gamma r) + j\sqrt{\frac{\varepsilon}{\mu}}\, \bar{f}_0(h) H_1^{(2)}(\gamma r) + \sum_{\nu=1}^{\infty} j\sqrt{\frac{\varepsilon}{\mu}}\, f_\nu(h) K_1(|q_\nu| r) \cos\frac{2\pi\nu}{l} z; \tag{6}$$

$$E_z^I = f_0(h) H_0^{(1)}(\gamma r) + \bar{f}_0(h) H_0^{(2)}(\gamma r) + \sum_{\nu=1}^{\infty} \frac{q_\nu}{\gamma} f_\nu(h) K_0(|q_\nu| r) \cos\frac{2\pi\nu}{l} z; \tag{7}$$

$$E_r^I = \sum_{\nu=1}^{\infty} \frac{2\pi\nu}{l\gamma} f_\nu(h) K_1(|q_\nu| r) \sin\frac{2\pi\nu}{l} z. \tag{8}$$

The field in region II (in the ring grooves in the diffraction grating) is defined as

$$E_z^{II} = f_0^{II}(h) U(\gamma, r, r_2);$$
$$H_\varphi^{II} = j\sqrt{\frac{\varepsilon}{\mu}}\, f_0^{II}(h) V(\gamma, r, r_2), \tag{9}$$

where

$$U(\gamma, r, r_2) = \left[H_0^{(1)}(\gamma r) - \frac{H_0^{(1)}(\gamma r_2)}{H_0^{(2)}(\gamma r_2)} H_0^{(2)}(\gamma r)\right];$$
$$V(\gamma, r, r_2) = \left[H_1^{(1)}(\gamma r) - \frac{H_0^{(1)}(\gamma r_2)}{H_0^{(2)}(\gamma r_2)} H_1^{(2)}(\gamma r)\right]. \tag{10}$$

The E_z^{II} component at the boundary of regions I and II at $r = r_3$ is $f_0^{II}(h)U(\gamma, r_3, r_2)$ at the ring grooves and is zero elsewhere on the surface. As E_z^{II} is periodic on the z axis, we can expand this component as a Fourier series with period l:

$$E_z^{II}|_{r=r_3} = \frac{d}{l} f_0^{II}(h) U(\gamma, r_2, r_3) \left\{ 1 + 2 \sum_{\nu=1}^{\infty} \frac{\sin(\pi\nu d/l)}{(\pi\nu d/l)} \cdot \cos \frac{2\pi\nu}{l} z \right\}. \tag{11}$$

The component $H_\varphi^I|_{r=r_3}$ is a function of z. To link up the solutions at the boundary we average $H_\varphi^I|_{r=r_3}$ over the width of a slot:

$$\begin{aligned} \tilde{H}_\varphi|_{r=r_3} = j \sqrt{\frac{\varepsilon}{\mu}} f_0(h) H_1^{(1)}(\gamma r_3) + j \sqrt{\frac{\varepsilon}{\mu}} f_0^-(h) H_1^{(2)}(\gamma r_3) - \\ - \sum_{\nu=1}^{\infty} j \sqrt{\frac{\varepsilon}{\mu}} \frac{2}{\pi} K_1(|q_\nu| r_3) f_\nu(h) \frac{\sin(\pi\nu d/l)}{(\pi\nu d/l)}. \end{aligned} \tag{12}$$

Linkage of the field at the boundary between regions I and II gives us the following relation between the amplitude of the initial-harmonic field $(|q_\nu|/\gamma) f_\nu(h)$ and the amplitude of the incident-wave field $f_0(h)$

$$\begin{aligned} \frac{(|q_\nu|/\gamma) f_\nu(h) \frac{1}{\pi} K_0(|q_\nu| r_3)}{f_0(h) H_0^{(1)}(\gamma r_3)} = \left[\frac{H_0^{(2)}(\gamma r_3) H_1^{(1)}(\gamma r_3)}{H_0^{(1)}(\gamma r_3) H_1^{(2)}(\gamma r_3)} - 1 \right] \frac{\sin(\pi\nu d/l)}{(\pi\nu d/l)} \times \\ \times \left\{ \frac{2H_0^{(2)}(\gamma r_3)}{H_1^{(2)}(\gamma r_3)} \sum_{\nu=1}^{\infty} \frac{\gamma}{|q_\nu|} \frac{K_1(|q_\nu| r_3)}{K_0(|q_\nu| r_3)} \frac{\sin(\pi\nu d/l)}{(\pi\nu d/l)} + \right. \\ \left. + \frac{l}{d} \frac{H_0^{(2)}(\gamma r_3)}{H_1^{(2)}(\gamma r_3)} \frac{V(\gamma, r_2, r_3)}{U(\gamma, r_2, r_3)} - 1 \right\}^{-1}. \end{aligned} \tag{13}$$

The expression (13) takes the following form for large values of the arguments, where asymptotic expansions apply for the cylindrical functions:

$$\begin{aligned} \left| \frac{\sqrt{\frac{|q_\nu|}{\gamma}} f_\nu(h) e^{-|q_\nu| r_3}}{f_0(h)} \right| = \\ = \frac{4 \frac{|\sin(\pi\nu d/l)|}{(\pi\nu d/l)}}{1 + \left[\frac{l}{d} \operatorname{ctg}(kb) - 2 \sum_{\nu=1}^{\infty} \frac{\gamma}{|q_\nu|} \left(\frac{\sin(\pi\nu d/l)}{(\pi\nu d/l)} \right)^2 \right]^2}. \end{aligned} \tag{14}$$

Equation (14) shows that the relation between the amplitudes of the spatial harmonics and that of the incident wave has the dependence on the found for planar gratings; the fall in the amplitudes of the spatial harmonics for large $(|q_\nu| r)$ on receding from the grating is defined by

$$\frac{K_0(|q_\nu| r)}{K_0(|q_\nu| r_2)} = e^{-|q_\nu|\zeta} \left(1 - \frac{\zeta}{2r_2} \right), \tag{15}$$

where $\xi = r - r_2$ (15) shows that the fall in the amplitudes of the spatial harmonics for large r_2 away from the surface of the structure is exponential, as for a planar grating. For r_2 small, the spatial harmonics lie closer to the surface of the structure.

2. MEASUREMENT OF THE FIELDS IN A COAXIAL SYSTEM WITH A DIFFRACTION GRATING

The open cavities had smooth focussing external mirrors and internal structures of cylindrical and conical shapes. The outer mirror had a diameter of 200 mm and a radius of curvature of 240 mm, and the width of the barrel section was 60 mm. The internal mirrors were as follows:

a) a cylindrical structure with ring diffraction structure of diameter 100 mm, repetition period of grating 2 mm, and width of grooves 1 mm and depth 2 mm;

b) a conical mirror with a ring groove having a cone angle of 5° and the same groove parameters; and

c) a cylindrical grating of the same outside diameter having a ring grating of period 2 mm with grooves of width 1.5 mm and depth 1.2 mm.

The experiments were performed with an upgraded form of an electrodynamic system employing a universal microscope type UIM-21 as described in [11]. The cavity was excited with a radial line supplied with UHF energy via a coaxial waveguide working with TEM waves at wavelengths λ of 7.5-12 mm. The distances between the planes in the radial line were less than $\lambda/2$. In that case, the open cavity is excited on axially symmetrical radial types of mode having nonzero E_z, E_r, H_φ field components. The coupling of the cavity to the load was provided by a hole of diameter 2 mm at the surface of the internal diffraction structure.

The amplitude characteristics of the open cavity field were asured with probe bodies, which were graphite spheres of diameter 1-2 mm. A probe body suspended on a capron filament was moved by a special device (a coordinate system) in two mutually perpendicular directions throughout the volume of the open cavity. The displacement transducers were linked to the sweep in the recording instrument. When the probe body scanned one of the coordinate planes, the screen of the indicator showed the field-distribution pattern.

This apparatus not only provided qualitative examination of the field structure for various types of mode but also quantitative field characteristics, for example, the widths of the gaussian beams, positions of the caustic surfaces, etc. Quantitative measurements were provided by a meter instrument, and the coordinates of the trial body were read directly from the scale of the displacement transducer.

When a wave falls on a periodic structure of open type, a surface wave is excited in the latter, which can interact strongly with the electron beam in backward-wave tube mode, and a diffraction generator can be used as a frequency converter [12]. This gives some interest to the slow-wave properties of the diffraction gratings in open cavities. When a hole at the surface of the grating is used for coupling to the load, one can readily measure the length of the surface wave propagating along the structure. The diffraction grating had a finite length, so the unmatched ends reflect the surface wave, and a standing wave is set up along the structure. Under our conditions, the dispersion characteristic of the structure (the slow-wave coefficient λ/λ_{s1} as a function of the free-space wavelength) may be determined by a modification of the perturbation method [10]. If a perturbing body is moved near the surface of the grating, the positions of the maxima and minima will move and will produce periodically repeating changes

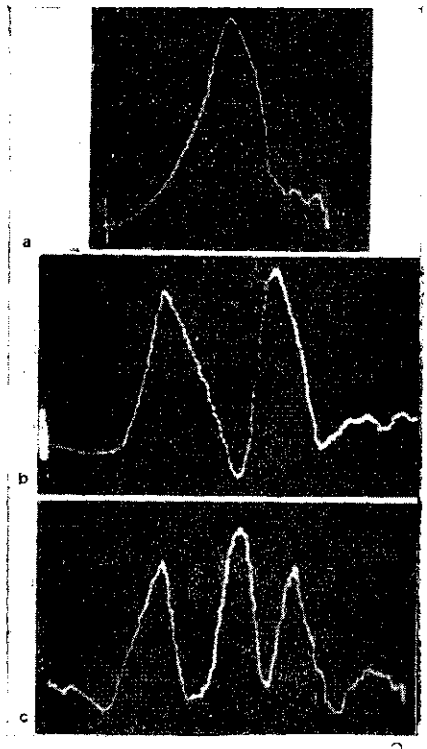

Fig. 4. Distribution of E^2 along the z axis in a radial plane for three modes in a cavity with a cylindrical grating: n = 0 (a), 1 (b), 2 (c).

in the standing wave in the slow-wave structure. With the indicator immobile, displacement of the local inhomogeneity is accompanied by change in the readings on the indicator device.

The perturbing body may be an ordinary trial body as used to visualize the fields. The coupling between the displacement transducer and the sweep in the recording device makes it possible to observe the standing surface wave throughout the length of the slow-wave system, along which the perturbing body is drawn (Fig. 2a). One measures the length L of the system (from the scale of the displacement transducer) within which there is an integer number of slow half-waves N in order to find the wavelength λ_{sl} of the slow wave for the given source frequency from

$$L = N\frac{\lambda_{sl}}{2};\ N = 0, 1, 2, \ldots,\ \lambda_{sl} = \frac{2L}{N}.$$

The shape and material of the perturbing body are not decisive to the measurements. This method gives reasonably precise determination of the slow-wave features of diffraction structures by the use of standard apparatus.

Figure 2b shows the dispersion characteristic of (3) for a structure having l = 2 mm, d = 1.5 mm, and b = 1.2 mm; we also show the theoretical curve for a planar grating with the same groove parameters. The cylindrical structure has a large radius of curvature (it meets the conditions for asymptotic representation

of the cylindrical functions), so the structure is essentially equivalent to a planar grating. The figure shows good agreement between the observed and theoretical curves.

Figure 3a shows the field distribution for the fundamental mode along the z axis for various distances from the internal structure. All the curves for E^2 have been normalized to E_0^2, which corresponds to the maximum field strength at the center of the cavity, when the trial body is at a distance of $\lambda/4$ from the surface of the grating. The curves illustrate the expansion of the gaussian beam away from the internal mirror. Curve 4 has a central dip, which occurs because the path followed by the trial body (straight line) deviates from the line of equal phase, which approaches the radius of curvature of the external mirror. This form of the curve is due to the difference in the response of the recording device to perturbations introduced by the trial body passing near minima and maxima in the standing-wave field.

The width of the beam is defined as the boundary at which the field is reduced by a factor e, and this can be determined from curves 1-4 to define the positions of the caustics for the open cavity. We get the typical gaussian beam shown in Fig. 3b for the azimuthally homogeneous field in the plane φ = constant; the results agree fully with the theoretical concepts used in describing the radial-mode fields in the coaxial cavity.

It proved possible to identify the three lowest types of mode in these coaxial cylindrical systems, which have various numbers of half-waves along the z axis (n = 0, 1, 2). Figure 4 shows curves for the field distribution in z in cavities of cylindrical structure. Similar patterns were obtained for the cavities with conical gratings, the difference from those shown in Fig. 4 was here the pronounced asymmetry, which was due to the conical form of the internal mirror.

Longitudinal displacement of the external mirror relative to the internal conical grating altered the resonant frequency; at a frequency of about 26 GHz, displacement of the mirror by 10 mm alters the frequency of the open cavity by 180 MHz.

REFERENCES

1. F. S. Rusin and G. D. Bogomolov, in collection: High-Power Electronics, No. 5 [in Russian], Moscow, p. 38, 1968.
2. V. P. Shestopalov, Diffraction Electronics [in Russian], Kharkov, 1976.
3. E. I. Nefedov, Radiotekhnika i Elektronika, vol. 22, no. 11, p.1769, 1977.
4. E. I. Nefedov and A. N. Sivov, Electrodynamics of Periodic Structures [in Russian], Moscow, 1977.
5. E. I. Nefedov, Izv. VUZ, Radiofizika, vol. 20, no. 11, p. 1740, 1977.
6. G. Goubau and F. Schwering, IEEE Trans. Microwave Theory and Technique, vol. MTT-13, no. 6, p. 749, 1965.
7. D. Marcuse (editor), Light Transmission Optics [Russian translation], edited by V. V. Shevchenko, Moscow, 1974.
8. S. S. Tret'yakov, O. A. Tret'yakov, and V. P. Shestopalov, Radiotekhnika i Elektronika, vol. 17, no. 6, p. 1366, 1972.
9. Yu. G. Al'tshuler and A. S. Taranenko, Low-Power Backward-Wave Tubes [in Russian], Moscow, 1963.
10. R. A. Silin and V. P. Sazonov, Slow-Wave Systems [in Russian], Moscow, 1963.
11. V. V. Leont'ev and Yu. A. Pirogov, Abstracts for the All-Union Symposium on Instruments and Techniques for Examining the Propagation of Millimeter and Submillimeter Waves in the Atmosphere [in Russian], Moscow, p. 174, 1976.

12. F. S. Rusin, L. A. Sinenko and V. P. Kostromin, Radiotekhnika i Elektronika, vol. 22, no. 8, p. 1670, 1977.

14 March 1978