Moscow University Physics Bulletin
Vol. 48, No. 5, pp. 67–72, 1993

Vestnik Moskovskogo Universiteta. Fizika
UDC 669.863:538

TRANSFORMATION OF THE $Gd_xCe_{1-x}MnSi$ MAGNETIC PHASE DIAGRAM INDUCED BY HYDROSTATIC PRESSURE

S. A. Nikitin, Yu. I. Spichkin, and A. M. Tishin

Experimental data have been used to build and analyze magnetic phase diagrams of $Gd_xCe_{1-x}MnSi$. Pressures of about 8–10 kbar have been found to induce antiferromagnetic ordering within the Mn sublattice for all the compounds studied. The results obtained are discussed on the assumption that the exchange interaction inside the ferromagnetically ordered layers prevails over the interlayer exchange interaction.

The increased interest in compounds of the RMSi type (R is a rare-earth element and M is a 3*d*-metal) is to a large extent due to a diversity of magnetic phase transitions displayed by these magnetic compounds. Upon crystallization, these compounds usually form a tetragonal crystal lattice of the PbFCl type [1] or an orthorhombic crystal lattice of the NiTiSi type [2, 3]. When M is a 3*d*-metal, the layered crystal structure can be represented by alternating layers of M, rare-earth, and silicon ions in the following order: M—Si—R—R—Si—M. Atoms of R and Si were found to occupy the 2 (*c*) sites and the M element, the 2 (*a*) positions. It was established that when R = Gd and M = 3*d*-metal, the R—R and M—M interatomic distances are larger than the sum of the respective atomic radii [1].

So far, magnetic measurement data are available for only a few compounds: LaMnSi [4, 5], GdMnSi [1, 4, 5], YMnSi [5, 6], DyMnSi and HoMnSi [4]. The study of these compounds have revealed that substitution of one rare-earth element for another brings about a drastic change in magnetic properties. For instance, LaMnSi displays weak ferromagnetism. Replacement of La by another nonmagnetic element Y gives rise to antiferromagnetism in YMnSi, which occurs in the following way. First there is a transition from paramagnetic to ferromagnetic ordering at the Curie temperature $T_c = 282$ K and then the ferromagnetic structure transforms into the antiferromagnetic one at the point $T_N = 100$ K [7]. The paramagnetic Curie temperature of YMnSi is $\Theta_p = 280$ K and $\mu_{\text{eff}} = 2.3\ \mu_B$. It was suggested in [1] that GdMnSi is a ferromagnetic compound with $T_c = 320$ K and $\Theta_p = 220$ K. In [8], the GdMnSi and $Gd_{0.95}Y_{0.05}MnSi$ compounds were studied by the method of nuclear gamma resonance and a correlation was found between the temperature dependences for the hyperfine field of Sn atoms and for magnetization. However, the character of the GdMnSi magnetic ordering was interpreted as ferrimagnetic. It was found that at $T = 77$ K the saturation magnetic moment $\mu_0 = 5.1\mu_B$ and $T_c = 321$ K. No contribution to the hyperfine field from 3*d*-moments was observed.

The objective of the present work was to study the effect of interatomic distances on the magnetic properties of $Gd_xCe_{1-x}MnSi$ isostructural compounds in which Gd was replaced by Ce and the magnetic ordering experienced considerable changes.

The samples to be studied were prepared by arc melting on a water-cooled copper melting hearth in an atmosphere of spectrally pure helium. The ingots obtained were then annealed in a 10^{-3} torr vacuum for 100 h at a temperature of 980°C. X-ray diffraction analysis showed that the compounds were isostructural and formed a tetragonal crystal lattice of the PbFCl type. Upon substitution of gadolinium for cerium the constants *a* and *c* were found to decrease. A concentration dependence of the unit cell volume V_0 for compounds studied in these experiments is given in Fig. 1. One can see that in the region of $x = 0.4$–0.5 the linear reduction of the unit cell volume is disrupted and an inflection appears on the $V_0(x)$ curve.

The following method of magnetization measurement under pressure was used. A sample with a length of about 8 mm and a cross section of about 1 mm^2 was placed in the center of a pickup coil put in a high-pressure chamber. A booster could raise the pressure in the chamber up to 1 GPa. The magnetic field in the chamber was produced by a shell-type electromagnet with a maximum field of 1.5 T. A detailed description of the setup can be found in [2]. The initial dynamic susceptibility was studied by a method described in [3].

©1993 by Allerton Press, Inc.

Authorization to photocopy items for internal or personal use, or the internal or personal use of specific clients, is granted by Allerton Press, Inc. for libraries and other users registered with the Copyright Clearance Center (CCC) Transactional Reporting Service, provided that the base fee of $50.00 per copy is paid directly to CCC, 27 Congress St., Salem, MA 01970.

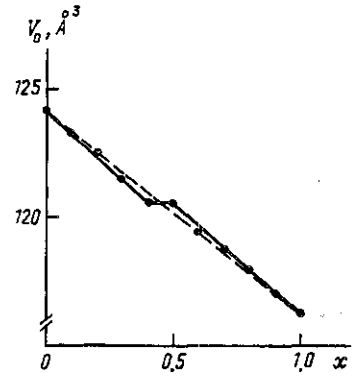

Fig. 1

Concentration dependence of the unit cell volume V_0 of $Gd_xCe_{1-x}MnSi$ compounds at ambient pressure.

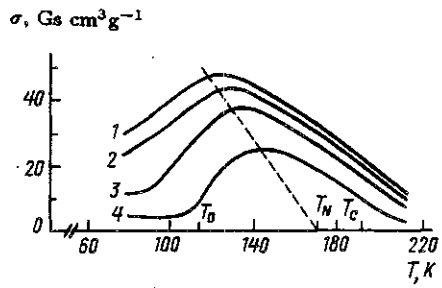

Fig. 2

Variation of the specific magnetization σ of $Gd_{0.5}Ce_{0.5}MnSi$ as a function of temperature at ambient pressure: B is 1.2 T (1), 0.95 T (2), 0.55 T (3), and 0.13 T (4).

Let us now consider the magnetic properties of the compounds in question at ambient pressure. A study of the specific magnetization has revealed a complicated character of the $\sigma(T)$ dependence of the $Gd_xCe_{1-x}MnSi$ compounds in different fields. This is illustrated in Fig. 2 by curves of magnetization versus temperature at ambient pressure for $Gd_{0.5}Ce_{0.5}MnSi$. Of similar shape are the $\sigma(T)$ curves of these compounds when $x < 0.7$. When $T = T_N$, the maximum observed on the $\sigma(T)$ curves shifts toward lower temperatures as the field intensity grows, which is typical of a paramagnetic to antiferromagnetic state transition (see Fig. 2).

The $\sigma(B)$ curves of the compounds with $x > 0.7$ display points, corresponding to the critical fields B_{cr}, after which σ starts to increase sharply. A substantial field hysteresis is observed at $B = B_{cr}$. The size of the hysteresis loop increases as the temperature diminishes. When the temperature grows, the fields B_{cr} in the alloys in question decrease and vanish at $T = T_0$. This suggests that in magnetic fields of $B > B_{cr}$ at $T < T_0$ the antiferromagnetic state breaks down. The Curie points of these compounds, calculated on the basis of thermodynamic theory of phase transitions, are listed in Table 1.

In the region of temperatures exceeding T_c and T_N, the reciprocal magnetic susceptibility $1/\chi$ obeys the Curie–Weiss law for all the compounds studied. The experimental data on changes of the reciprocal magnetic susceptibility with temperature were used to calculate the paramagnetic Curie temperatures Θ_p and the effective magnetic moment μ_{eff} of the compounds (see Table 1). The results on the magnetic properties of $Gd_xCe_{1-x}MnSi$ we obtained agree by and large with the data found earlier [9] when other techniques of magnetization measurement were employed.

In this work the primary attention was focused on the study of the effects of all-round compression

Table 1

The Effective Magnetic Moment μ_{eff} per Compound Molecule, the Paramagnetic Curie Temperature Θ_p, and the Magnetic Phase Transition Temperatures T_c, T_N, and T_0 for $Gd_xCe_{1-x}MnSi$ Compounds

x	μ_{eff}, μ_B	T_c K	T_N K	T_0 K	Θ_p K
0.3	5.5	—	129	130	46
0.4	6.0	—	132	132	98
0.5	6.6	192	169	112	164
0.6	6.7	218	170	60	208
0.7	7.2	251	172	—	222
0.8	7.5	268	175	—	254
0.9	7.9	279	—	—	284
1.0	8.2	310	—	—	306

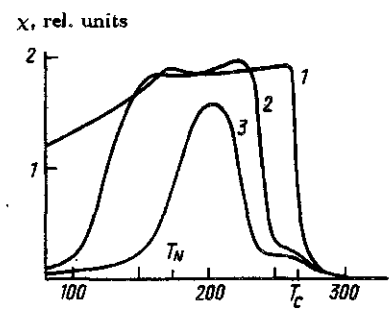

Fig. 3

Temperature dependence of the dynamic magnetic susceptibility of the $Gd_{0.8}Ce_{0.2}MnSi$ alloy at ambient pressure (1) and pressures of 7.5 kbar (2) and 9 kbar (3).

on the magnetization and initial susceptibility of $Gd_xCe_{1-x}MnSi$ compounds. Pressure was found to affect substantially the curves of magnetization versus temperature $\sigma(T)$ and also the curves of magnetization $\sigma(B)$ and magnetic susceptibility $\chi(T)$ (Fig. 3). For instance, the anomalies related to the point of $T = T_0$ disappear from the $\sigma(T)$ and the $\chi(T)$ curves at certain values of pressure. The effect of pressure also manifests itself in the disappearance of critical fields in the $\sigma(T)$ fields. Experimental data on the effect of pressure on magnetization and initial susceptibility were used to build the system phase diagram at $p \neq 0$. A typical phase diagram for a $Gd_{0.6}Ce_{0.4}MnSi$ specimen in the $T_{c,N}(p)$ coordinates is shown in Fig. 4. It was found that in compositions with $x = 0.8$–0.5 the region of existence of magnetic ordering between T_c and T_N narrows with growing pressure and disappears at $p \simeq 8$ kbar. The ratio $\partial T_c/\partial p$ is positive in GdMnSi; however, whereas at low pressures $\partial T_c/\partial p = 1.25$ K/kbar, at $p > 6$ K/kbar $\partial T_c/\partial p$ turns out to be quite small and practically does not change. Note that the position of the minimum on the $T_N(p)$ curves practically does not change at gadolinium concentrations in the range of $x = 0.5$–0.8 and it moves slowly toward lower pressures at $x \leqslant 0.4$.

Phase diagrams of the system studied at pressures of 5 and 9 kbar are presented in Figs. 5 b and c. One

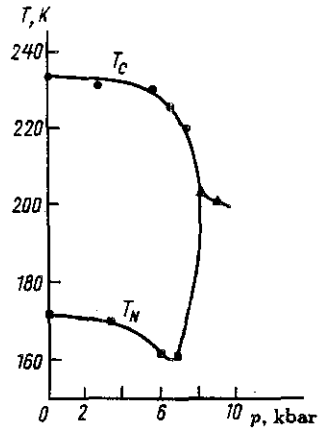

Fig. 4

Points of magnetic phase transitions, T_c and T_N, for $Gd_{0.6}Ce_{0.4}MnSi$ versus pressure.

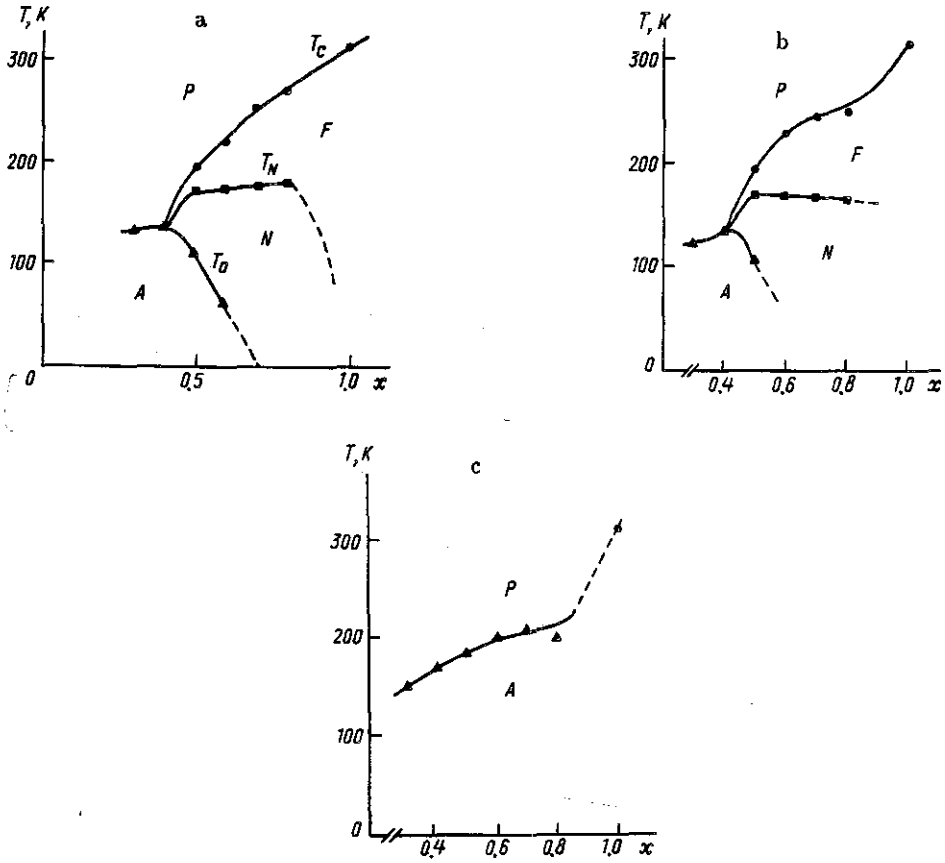

Fig. 5

Concentration dependence of magnetic ordering temperatures at ambient pressure (a), and at pressures of 5 kbar (b) and 9 kbar (c). F: region of ferrimagnetic ordering; P: region of paramagnetic state; A: region of antiferromagnetic ordering; N: noncollinear phase.

can see that at $p = 9$ kbar the phase diagram is represented by a single curve that separates the paramagnetic and the magnetically ordered states.

As was indicated in [6], the rare-earth and the manganese ions each has a crystallographic site of a single type. Therefore the magnetic moments of the rare-earth and manganese ions can be considered as two sublattices.

The interpretation of the results encounters difficulties because of lack of any information about the magnitude of the cerium ion magnetic moment in the compounds studied. At the same time, in compounds with compositions close to RMnSi, the Ce moment changes in a wide range. For example, in $CeMnSi_2$ the cerium sublattice has a ferromagnetic ordering and is related antiferromagnetically with the Mn sublattice, and $\mu_0^{Ce} = 0.23\mu_B$ at $T = 4.2$ K [10]. In [11], neutron diffraction analysis revealed that the magnetic structure of $CeMn_2Si_2$ is composed of ferromagnetic layers of Mn atoms in antiparallel ordering along the crystallographic axis c and that Ce lacks magnetic moment. It was also found in [7] that in $CePd_2Si_2$ the Ce magnetic moment decreases from 2.55 μ_B at $T > 100$ K to 0.66 μ_B at $T = 4.2$ K due to the influence of the crystal field. No Ce ion moment was found in $CeMn_2Ge_2$, either [12]. It seems likely that the Ce moments are antiferromagnetically ordered with respect to the Gd moments and apparently reduce the moment of the rare-earth lattice. In view of the fact that in the compounds in question the pattern of magnetic transformation is primarily affected by interactions of the Gd—Mn and Mn—Mn type, the authors of [12] further on consider the rare-earth sublattice as a single one with a moment that is determined by the difference between the moments of Gd and Ce. One can assume that the exchange interaction between the rare-earth and the manganese sublattices is negative. At the same time, the magnetic moments of the Mn and Gd sublattices are ordered ferromagnetically in their planes along the c axis.

Analysis of the data we obtained for GdMnSi, as well as data from [1, 4, 5], suggests that in this compound at $T = T_c$ there occurs a transition from paramagnetic to ferromagnetic ordering of the Gd and Mn planes. This conclusion is also supported by the magnitude of the saturation moment and the shape of the $H/\sigma(\sigma)^2$ curve. A similar transition takes place in specimens with $x > 0.4$ (see Fig. 5 a) in the region of high temperatures.

At lower temperatures, when $T = T_N$, the specimens studied show a transition to the antiferromagnetic state in the Mn sublattice, which is indicated by the shape of the $\sigma(T)$ and $\chi(T)$ curves (see Figs. 2 and 3).

One can assume that the antiferromagnetic ordering is noncollinear and intermediate between a purely ferromagnetic state and a lower-temperature antiferromagnetic phase within which the moments of the Mn layers are ordered in a strictly antiparallel way. The T_N temperatures for samples with $x = 0.9$–1.0 were not determined, because their positions could not be found from the appearance of the $\sigma(T)$ and $\sigma(B)$ curves and the $\chi(T)$ curves at $T < 77$ K were not studied.

It has been noted earlier that the $\sigma(B)$ curves of specimens with $x < 0.7$ show critical points. The fact that at $x = 0.7$ the character of the exchange interaction in these compounds alters is also confirmed by the relationships between the squared magnetic saturation moment and the Curie temperature. A calculation with the use of data from [9] has shown that at $T \simeq 260$ K the linear dependence $\mu_0^2(T_c)$ undergoes disruption. This alteration can be explained as follows. When $x = 0.7$–1.0, the Gd sublattice exerts a magnetizing effect on the Mn layers, but as the Gd concentration diminishes, the effective field produced by gadolinium decreases and the Mn sublattice becomes antiferromagnetically ordered. It can be assumed that when $x \leqslant 0.7$ at $T = T_0$ there appears a phase with a collinear antiferromagnetic ordering of the Mn layers in the low-temperature region (see Fig. 5 a). The phase diagram shows that this phase predominates with $x \leqslant 0.4$.

An increase of the field strength brings about a ferromagnetic ordering in the Gd layers at $B > B_{cr}$ and $0.2 < x < 0.4$. Apparently, in this case there arises a ferrimagnetic exchange interaction between the Mn and Gd layers which disrupts the antiferromagnetic ordering of the Mn layers. This results in the appearance of critical magnetic fields B_{cr} and an increase in magnetization at $B > B_{cr}$. When $x > 0.4$, at temperatures $T > T_N$ the magnetic interaction between the Gd layers becomes substantial, which leads to a ferrimagnetic ordering of Gd and Mn layers at these temperatures even in the absence of the field.

The experimental data obtained suggest that pressure induces considerable changes in the properties of the compounds studied. A dependence of the character of magnetic interactions on the interatomic distances has been earlier established for several binary systems. In [13], the study of the effect of pressure on the properties of the $Sm_{1-x}Y_xMn_2Ge_2$ system revealed that pressure of about 6–8 kbar brings about the disappearance of the ferromagnetic region and setting up of an antiferromagnetic state. The $Gd_xCe_{1-x}MnSi$ compounds show a similar behavior (see Fig. 5). At 9 kbar all the specimens exhibit only the antiferro-

magnetic and paramagnetic states and the phase diagram is just a line separating the paramagnetic and antiferromagnetic states. It was established in [11] that in the $Ce_{1-x}La_xMn_2Si_2$ compounds the type of the magnetic structure depends on the Mn—Mn interatomic distance within the basal plane. When this distance is less than 2.865Å at room temperature one observes an antiferromagnetic ordering. Our data also suggest the conclusion that the RMnSi compounds are very sensitive to the volume V_0 of the unit cell. A reduction of this volume induced by pressure brings about an antiferromagnetic ordering. The magnitudes of the shifts of phase transition temperatures under all-round compression we observed differ markedly from the value obtained, e. g., for $DyMn_2Ge_2$ in [14] ($\partial T_N/\partial p = 2$ K/kbar). For instance, in $Gd_{0.5}Ce_{0.5}MnSi$, $\partial T_N/\partial p = 4.5$ K/kbar and $\partial T_c/\partial p = -2.5$ K/kbar. There is also a difference in the shape of the $T_c(p)$ and $T_N(p)$ curves. In [13], a linear dependence of the transition points on pressure was observed: as the pressure increased the temperature T_N grew markedly while T_c either remained unchanged or slightly decreased. A characteristic feature for the compounds studied by us is the curves of the transition points versus pressure presented in Fig. 4. According to [15], curves of such shape can be observed if $A_1/A_0 < 0$ and $A_2/A_0 > 0$, where A_i are constants describing the elastic and magnetoelastic properties of the compounds. Curves of this type can be obtained when nonlinear contributions to the exchange-magnetostriction interactions are taken into account.

The authors are very grateful to R. S. Torchinova for her assistance in the preparation of the specimens and to T. I. Ivanova for useful discussion of the experimental results.

REFERENCES

1. H. Kido, M. Shimada, and M. Koizumi, *Phys. Status Solidi A,* vol. 70, p. K 23, 1982.
2. S. E. Bykhover, S. A. Nikitin, Yu. I. Spichkin, et al., *Zh. Eksp. Teor. Fiz.,* vol. 97, no. 6, p. 1974, 1990.
3. S. A. Nikitin, A. M. Tishin, M. D. Kuz'min, and Y. I. Spichkin, *Phys. Lett.,* vol. 153A, no. 2–3, p. 155, 1991.
4. S. A. Nikitin, T. I. Ivanova, E. I. Nekrasova, et al., *Fiz. Met. Metalloved.,* vol. 64, no. 6, p. 1071, 1987.
5. Vaneliff Jonson, U. S. Patent 3.969.829, 1976.
6. H. Kido, T. Hoshikawa, M. Shimada, and M. Koizumi, *Phys. Status Solidi A,* vol. 88, p. K 39, 1985.
7. R. A. Steeman, T. E. Mason, H. Lin, et al., *J. Appl. Phys.,* vol. 67, p. 5203, 1990.
8. N. N. Delyagin, V. I. Krylov, G. T. Mujiri, et al., *Phys. Status Solidi B,* vol. 131, p. 555, 1985.
9. S. A. Nikitin, O. V. Nekrasova, T. I. Ivanova, and Yu. F. Popov, *Vest. Mosk. Univ. Fiz. Astron.,* vol. 33, no. 1, p. 101, 1992.
10. B. Nalaman, G. Venturini, L. Pontonier, and D. Fruchart, *J. Magn. Magn. Mater.,* vol. 86, p. 349, 1990.
11. A. Szytula and S. Siek, *J. Magn. Magn. Mater.,* vol. 27, p. 49, 1982.
12. J. Leciejewicz , A. Szytula, W. Bazela, and S. Siek, *J. Magn. Magn. Mater.,* vol. 89, p. 29, 1990.
13. M. Duraj, R. Duraj, and A. Szytula, *J. Magn. Magn. Mater.,* vol. 82, p. 319, 1989.
14. T. Kaneko, H. Yasui, T. Kamotato, et al., *J. de Phys. Colloque C8 Suppl. 12,* vol. 49, p. C 8-441, 1988.
15. N. P. Grazhdankina, I. F. Mirsaev, M. A. Novikov, et al., *Fiz. Met. Metalloved.,* vol. 51, p. 547, 1981.

7 October 1992

Department of General Physics
for Natural Science Faculties