Moscow University
Physics Bulletin
Vol. 49, No. 4, pp. 72–80, 1994

Vestnik Moskovskogo
Universiteta. Fizika
UDC 535:543.46

TRENDS IN SUBMILLIMETER SPECTROSCOPY OF SOLIDS

G. V. Kozlov*

A brief review of new experimental methods in submillimeter spectroscopy is given. Particular attention is given to time resolution techniques based on femtosecond measurements. Ways of increasing the accuracy of measuring the spectra of conductivity and dielectric losses in materials opened by multibeam resonance systems are discussed.

1. INTRODUCTION

Recent years have witnessed a substantial enhancement of studies in submillimeter radiophysics and spectroscopy. The interest of researchers in these fields stems from the demand, long since recognized, for mastering the submillimeter range in practice; it was aroused by a series of important events, of which the principal one was the discovery of high-temperature superconductivity (HTSC). Experimental data on the conductivity of superconductors in the far infrared (far IR) region are of key importance for elucidating the mechanism of formation of the superconducting state. No wonder that all of the larger laboratories that received financial support for studying the problem of HTSC strived to purchase the necessary spectroscopic instrumentation. The past six years have been the golden (in the true meaning of the word) age for firms producing Fourier spectrometers, submillimeter lasers, and other spectral equipment for the far IR region.

The second serious stimulus for developing submillimeter techniques is public concern for the quality of the environment related to such problems as ozone holes and the greenhouse effect. Experiments showed that recording radiation that corresponds to rotational and vibrational transitions in molecules is one of the most sensitive and reliable methods of control of the atmospheric concentrations of gases that play the key role in these global processes of climatic changes [1, 2].

Other applied problems whose solution is in some or another way related to the use of giga- and terahertz frequencies include the problems of fiber optical waveguides with high-frequency modulation, precision location, navigation and radiovision, nondestructive control of semiconductors, dielectrics, and other radiotransparent substances, etc. Doubtless, the use of submillimeter waves for scientific purposes in spectroscopy, solid-state physics, biology, plasma physics, astrophysics, and radioastronomy is of as great importance as ever.

2. THREE TRENDS IN SUBMILLIMETER SPECTROSCOPY

So far the most extensively used technique for studies in the far IR region has been Fourier spectroscopy. This technique is being developed by increasing the sensitivity of detectors, designing more effective interferometers (largely of polarization type), and by turning to measurements of complex reflectance and transmission spectra [3–5]. All these improvements aim at increasing the efficiency of Fourier spectrometers primarily in the long-wave region ($\nu \approx 10$ cm^{-1}).

Another and qualitatively new approach to submillimeter measurements is time resolution spectroscopy. Originally, this method was based exclusively on femtosecond laser techniques. Measurements were made

* Institute of General Physics, Russian Academy of Sciences, Moscow.

©1995 by Allerton Press, Inc.
Authorization to photocopy individual items for internal or personal use, or the internal or personal use of specific clients, is granted by Allerton Press, Inc. for libraries and other users registered with the Copyright Clearance Center (CCC) Transactional Reporting Service, provided that the base fee of $50.00 per copy is paid directly to CCC, 222 Rosewood Drive, Danvers, MA 01923. An annual license may be obtained only directly from Allerton Press, Inc., 150 5th Avenue, New York, NY 10011.

by detecting a short optical or infrared laser pulse to obtain terahertz radiation corresponding to the broad spectrum of the pulse envelope. This approach was for the first time realized using nonlinear optical crystals [6, 7]; later, a more convenient and effective photoelectric technique was developed [8, 9]. This technique deserves some consideration.

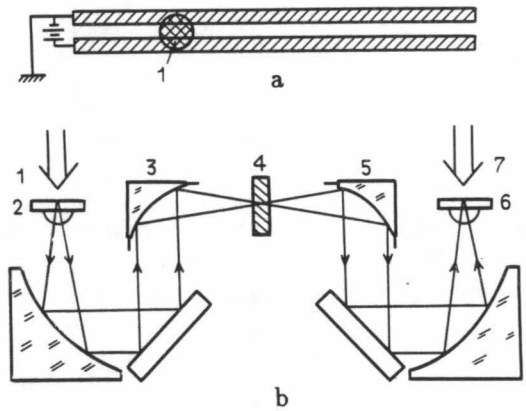

Fig. 1

(a) Schematic diagram of a generator of millimeter waves based on a femtosecond laser [9]: laser beam 1 is focused onto a semiconducting substrate between the conductors of a coplanar circuit. (b) Quasi-optical schematic diagram of a laser time-resolution spectrometer [10]: laser pulses (1 and 7) irradiating generator 2 and detector 6; sample 4 is situated in the focus of the beam of millimeter radiation between two parabolic mirrors 3 and 5.

A schematic of the radiation source is given in Fig. 1 a. This is a coplanar circuit on a semiconducting (Si or GaAs) substrate charged from a constant voltage source. Laser beam 1 is focused onto the surface of the semiconducting substrate between the electrodes forming the coplanar circuit. A laser pulse generates photocurrent which plays the role of a switch closing the circuit. The current-generated field is collimated by a lens into a quasi-optical beam. The beam passes through a measuring device and is then focused onto a detector [10]. The detector is also made as a coplanar circuit, but connected to a measuring device rather than a charging voltage source. Together with the terahertz radiation, the optical laser pulse (beam 2) is transmitted to the detector. This pulse is branched off the major (generation) pulse and preliminarily passes through a controlled delay system not shown in Fig. 1. Measurements give the dependence of the detector current on the laser pulse delay time, or time interferogram. The interferogram carries information about both the amplitude and phase of the terahertz signal. A comparison of two interferograms obtained with and without a sample in the measuring circuit makes it possible to calculate the spectra of the complex permittivity of the sample without using the Kramers–Kronig relations.

This method was applied to study the spectra of conductivity of superconductors [10–12], semiconductors and dielectrics [13–16] in the terahertz region and gave positive results.

Recently, an important improvement was introduced into time-resolution spectroscopy, namely, a wideband source of terahertz radiation based on a nonlinear sharpening line was realized [17, 18]. A schematic of such a generator is shown in Fig. 2. A coplanar circuit plays the role of the nonlinear element, and the velocity of signal propagation in this circuit depends on the signal amplitude. This is achieved by the attachment to a semiconducting substrate of a series of Schottky diodes connecting the circuit conductors. A signal in the form of a voltage step from an SHF generator is applied to the circuit input. After passing the circuit, the signal is sharpened, and the width of the voltage drop front decreases to less than 1 ps at the output. The radiated spectrum is approximately the same as with the laser photoelectric generator considered above. The problem of recording the terahertz radiation is solved in a similar way. An obvious advantage of the generator with a sharpening circuit is its greater simplicity and lower cost compared to femtosecond laser systems.

The third trend in submillimeter spectroscopy is the use of monochromatic radiation sources. In this field, backward wave tube (BWT) spectroscopy has long been the leader. BWTs are monochromatic

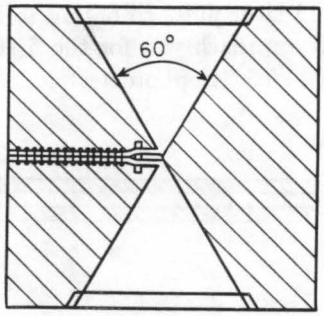

Fig. 2

Schematic diagram of a generator based on a sharpening transmission line with an antenna. The hatched regions are metallized surfaces on a semiconducting substrate. Jumpers represent Schottky diodes connecting the transmission circuit conductors.

generators developed in Russia. These generators are characterized by wide-range frequency retuning and work at frequencies up to 1.2 THz [19, 20]. Modern BWT spectrometers can be used to directly measure the dielectric and magnetic spectra of virtually all substances and materials [21–23]. They give more accurate data than most other far IR instruments.

Frequency synthesizers with Gann diodes as a radiation source ($\nu \leqslant 100$ GHz) and frequency multipliers based on Schottky diodes begin to compete with BWT generators. At present, such sources operate at frequencies up to 700 GHz [24]. Although the higher harmonics give a comparatively low radiation power, analyzers based on frequency synthesizers have a rather high margin of the signal level (about 50 dB) because of the use of high-sensitivity heterodyne receivers. An advantage of frequency synthesizers over BWTs is the high Q-factor of generation circuits, and a disadvantage is the absence of continuous coverage of the operating range and a low power of higher-harmonic radiation.

A noticeable progress is also observed in gas laser techniques. The number of generation spectral lines in the region of submillimeter waves is constantly increasing, and the range of laser tuning broadens. The high Q-factors of gas laser generation lines make it possible to effectively use heterodyne receivers [25].

The ellipsometric technique based on the use of far IR lasers has been advanced considerably [26].

To summarize, the brief review of the developments in the submillimeter spectroscopy techniques leads us to conclude that recent years have been a period of considerable progress in this field involving an ever increasing number of new researchers into this branch of study.

3. INCREASING THE ACCURACY OF MEASUREMENTS

The traditional technique for measuring the dielectric spectra of solids on far IR spectrometers involves two procedures: the determination of the modulus of the coefficient of reflection from the surface of a sample in a wide frequency range and subsequent calculations of the spectra of the imaginary and real parts of the permittivity using the Kramers–Kronig formulas. With dielectrics, this technique often gives quite good results. This, however, hardly applies to conducting materials. The usual accuracy of reflection coefficient measurements ($\Delta R \approx 1$–5%) is insufficient for even a qualitative determination of the character of variations in the spectra of conductivity $\sigma(\nu)$ of high-conductivity materials in the region of millimeter and submillimeter waves. Unfortunately, the extensive modern literature usually contains data on far IR spectra of high-temperature superconductors without discussing or indicating their accuracy. This seems to be due to the fact that, according to scrupulous estimates, the errors of conductivity determination by this method exceed 100% of the values measured. For this reason, to improve the accuracy of measuring the reflectance spectra of conducting samples is an urgent problem of far IR spectroscopy.

An obvious and, at the same time, promising way of improving the methods of measuring high reflection coefficients is to apply multibeam systems, in which the surface of the sample acts as a resonator mirror [27–30]. An increase in the accuracy is achieved by increasing the effective number of reflections from the surface studied.

The specific features of resonator systems are to a large extent determined by the type of the sample and vary from thin films to bulky samples. With thin films, the substrate itself, i. e., a plane-parallel dielectric plate with the film to be studied on one of its sides, can serve as a resonator [31]. The Q-factor of such a dielectric resonator is determined by the refractive index n and the absorption coefficient k of the substrate material. The higher the n value the higher is the reflection coefficient from the surface and the higher the Q-factor. At the same time, the smaller the coefficient k the lower are energy losses in the resonator and the higher its Q-factor. Some dielectric and semiconductor crystals included in Tables 1 through 3 can be recommended as promising substrate materials [23, 32].

Table 1

Crystal	ν, GHz	n	$k \times 10^3$	ε'	$\varepsilon'' \times 10^2$	$\tan\delta \times 10^3$
$SiO_2(o)$	500	2.106	0.15	4.44	0.063	0.1
	700	2.106	0.20	4.44	0.084	0.2
	900	2.108	0.25	4.44	0.11	0.2
$SiO_2(e)$	500	2.155	0.12	4.64	0.052	0.1
	700	2.156	0.15	4.65	0.065	0.1
	900	2.156	0.17	4.65	0.073	0.2
$Al_2O_3(o)$	500	3.050	1.50	9.30	0.92	1.0
	700	3.060	2.00	9.36	1.22	1.3
	900	3.060	2.50	9.36	1.53	1.6
$Al_2O_3(e)$	500	3.390	1.50	11.5	1.02	0.9
	700	3.400	2.00	11.6	1.36	1.2
	900	3.400	2.50	11.6	1.70	1.5
$MgF_2(o)$	300	2.335	0.70	5.45	0.33	0.6
	500	2.345	1.40	5.50	0.66	1.2
	700	2.354	2.40	5.54	1.13	2.0
$MgF_2(e)$	300	2.173	0.80	4.72	0.35	0.7
	500	2.181	1.70	4.76	0.74	1.6
	700	2.190	2.80	4.80	1.23	2.6

The spectra of a dielectric resonator with a film can be measured in the reflectance and transmittance modes if the film is fairly thin. In the transmittance mode, the accuracy of conductivity measurements is especially high when a dielectric resonator is covered by the film to be studied on both sides. In reality, the Q-factor of a two-sided system can exceed 10^2, and the effective accuracy of determining the reflection coefficients of the films will be higher than 0.1% (Fig. 3) [31]. An important advantage of the resonator technique is the possibility of using transmission or reflectance spectra to extract information about the phase of the mirror reflection coefficient and to calculate directly the conductivity spectra of the films.

Another variant of a measuring resonator is two separate films on substrates with an air gap between them (Fig. 4) [30]. In this variant, the material of the substrates is outside the resonator volume, therefore no severe requirements are imposed on its n and k parameters. The Q-factors of such resonators can be higher than those of dielectric devices because there is no losses within resonators, and the reflection coefficient at the substrate-film interface is higher when the incident radiation comes from the outside than when it comes from the inside. The two resonator mirrors should not necessarily be made of the material studied. One of the mirrors can be, for instance, a meshwork or a wire grid with an appropriate reflection coefficient [27]. The highest sensitivity in measuring the reflection coefficients of samples is achieved when the mirror reflection

Table 2

Materials	ε'			ε''			ν, GHz (cm^{-1})
	300 K	100 K	5 K	300 K	100 K	5 K	
$GdAlO_3(\perp)$	18.4			0.12			300(10)
$GdAlO_3(\|)$	18.5			0.10			300(10)
$LaAlO_3(\perp)$	24.7	24.4 (150 K)	24.3	0.05	0.05 (150 K)	0.05	390(13)
$LaAlO_3(\|)$	20.3			0.13			840(28)
$LaGaO_3(\perp)$	25.7	24.6 (50 K)	24.6	0.13	0.13 (50 K)	0.11	330(11)
$LaGaO_3(\|)$	26.4	25.0 (50 K)	24.9	0.12	0.10 (50 K)	0.08	330(11)
$SrLaAlO_4$	17.0			0.02			540(17)
$CaNdAlO_4$	19.7	19.8	19.8	0.04	0.02	0.01	510(17)
$BaLaGa_3O_7(\perp)$	9.44			0.06			630(21)
$BaLaGa_3O_7(\|)$	12.5			0.12			630(21)
$SrLaGa_3O_7(\|)$	12.8	12.5	12.5	0.10	0.03	0.01	540(18)

coefficients are the same. Operating a "hollow" resonator involves certain technical difficulties of realigning the mirrors when the temperature varies.

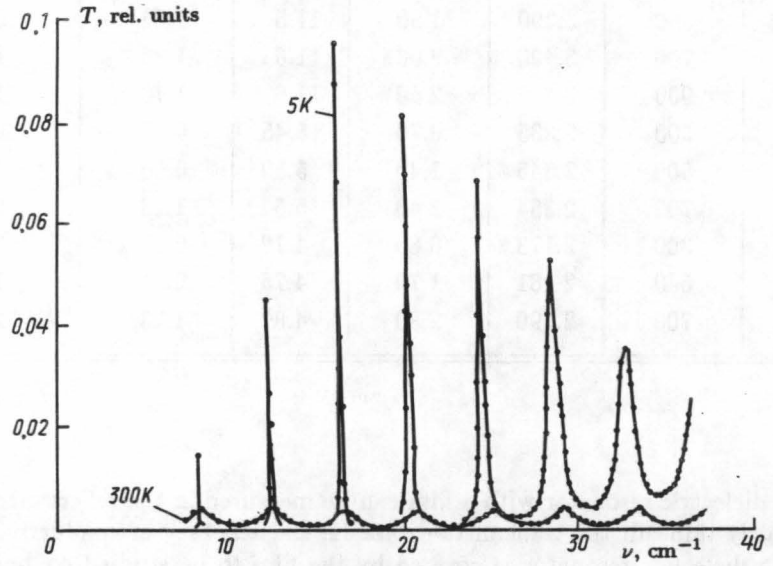

Fig. 3

Transmission spectra of a dielectric resonator made of 0.39 mm thick sapphire with a two-sided coating by a NbN film 540 Å thick; the spectra were taken at 300 and 5 K.

Measuring the conductivity spectra is generally a more complex problem for bulky samples than for thin films. All the transmission techniques are then inapplicable, and virtually the only suitable measuring device is the reflection resonator, but its use in this case is a much more complex problem than with thin films. Additional difficulties stem from stringent requirements to sample surface preparation. To measure the phase shift in reflection from a sample, the surface of the sample should be made planar with accuracy to fractions of a micron. With thin films, this requirement is fulfilled when the substrate surface is treated

Table 3

T, K	$\nu = 10$ cm^{-1}		$\nu = 29$ cm^{-1}	
	ε'	$\sigma \times 10^3$, ohm^{-1} cm^{-1}	ε'	$\sigma \times 10^3$, ohm^{-1} cm^{-1}
		Silicon ($N \approx 1.3 \times 10^{13}$ cm^{-3})		
20	11.4	—	11.4	0.5
100	11.4	1.1	11.4	0.5
200	11.5	2.3	11.6	1.2
296	11.6	2.4	11.6	1.2
373	11.8	2.7	11.8	1.4
473	11.9	12	11.9	11
		Germanium ($N \approx 5.6 \times 10^{13}$ cm^{-3})		
20	15.4	0.1	15.3	1.4
100	15.5	1.5	15.4	1.6
200	15.7	2.4	15.6	2
296	16.0	10	16.0	6
373	14.3	430	15.7	240
374	11.0	4000	13.9	2700
		High-resistance gallium arsenide ($N \approx 2.4 \times 10^6$ cm^{-3})		
30	12.5	1.1	12.5	1.6
100	12.6	1.2	12.6	2.3
200	12.7	1.3	12.8	3.8
296	12.9	1.9	12.9	5.0
373	13.1	2.0	13.1	6.0
473	13.4	3.1	13.3	8.1

by ordinary optical techniques. Surface treatment of bulky conductors, such as HTSC single crystals and ceramics, organic conductors and semiconductors is a separate problem with each material, and its successful solution cannot be guaranteed and depends on many unpredictable factors. Problems arise primarily because of crystal imperfections and the irreversible effect of the treatment procedure on the physical properties of the surface.

The few examples of experimental realization of the resonator technique with bulky samples can be found in [27–29]. The technique is illustrated by Fig. 5. The resonator is a plane-parallel rutile (TiO_2) plate. The spectral dependence of the resonator reflection coefficient represents a sequence of resonance minima. The frequency positions of the minima are determined by the optical thickness of the rutile plate and the phase shift at the rear boundary. The depths of the minima depend on the reflection coefficient values at the boundaries and on the absorption coefficient of rutile.

Figure 5 shows that substituting an aluminum mirror for a superconducting sample causes substantial changes in the resonator reflectance spectrum, which is indicative of a high sensitivity of the resonator technique.

Above, we discussed the difficulties of measuring the spectra of low-transparent and nontransparent samples. An opposite situation, and also an important one for practical applications, arises in measuring very low (of $\sim 10^{-4}$–10^{-5}) absorption coefficients. At such k values, the transmission spectra of even thick ($d \sim 10$ mm) samples show low sensitivity to losses. The transmission coefficients at interference maxima (these regions in the $T(\nu)$ spectrum are the most sensitive to losses in the sample) differ from 100% by $\Delta T \leqslant 1\%$, which is at the level of experimental errors. Low absorption coefficients are usually measured with the help of Fabry–Perot resonators [33]. This approach gives satisfactory results when measurements

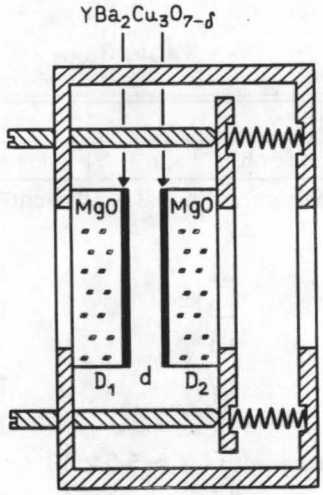

Fig. 4

Schematic diagram of a quasi-optical Fabry–Perot resonator with two HTSC films on MgO single-crystal substrates as mirrors. D_1 and D_2 are the thicknesses of the MgO substrates, and d is the gap between the HTSC mirrors.

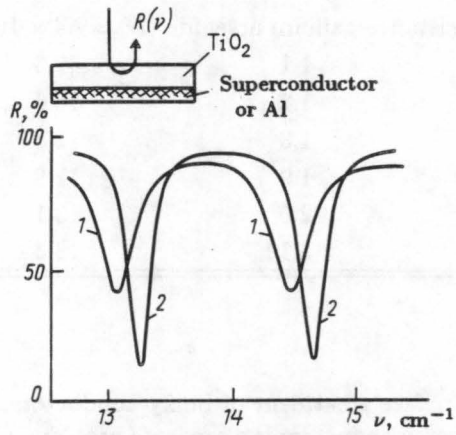

Fig. 5

Scheme illustrating measurements of the modulus and phase of the reflection coefficient of a ceramic HTSC material using a dielectric resonator made of rutile (TiO_2) and experimental reflection spectra of this resonator with a superconductor (1) and an aluminum mirror (2).

are made at a constant wavelength λ and use is made of samples of thicknesses d satisfying the resonance condition

$$nd = m\lambda/2,$$

where m is an integer. However in wide-range spectroscopy, this technique cannot be used in its conventional version. As is known, problems arise because of power losses in the resonator through reflection from the sample surface. These losses appear as soon as the resonance condition for the optical thickness of the sample is violated.

A resonator completely filled with a dielectric can be recommended for measuring low losses in samples. There exist at least two possibilities for preparing high-reflectance mirrors on the surface of a plane-parallel dielectric sample. The first possibility is spraying or depositing metal films, networks, or grids directly on the sample surface. The second technique involves mechanical attachment of mirrors in the form of meshworks or one-dimensional nets to the sample surface. The second technique is simpler to realize, but it is less

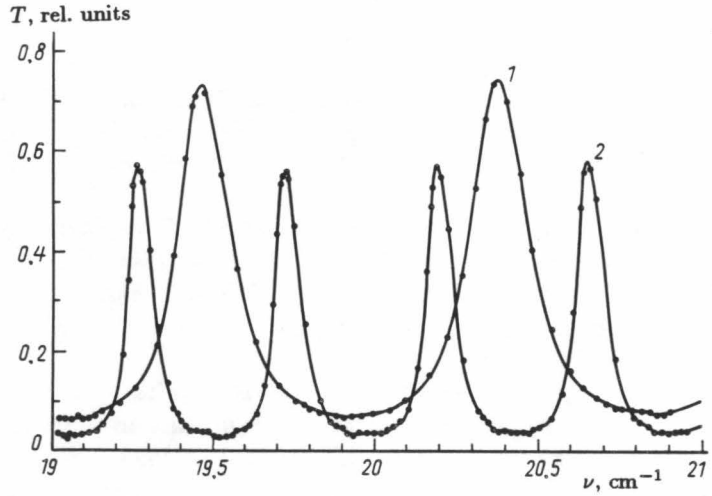

Fig. 6

Transmission spectra of dielectric resonators made as plane-parallel crystalline quartz plates spray-coated with meshworks to increase the reflection coefficient of the surface at resonator thicknesses of 2 mm (1) and 4 mm (2). The decrease in height of the maxima of curve 2 is caused by additional dielectric losses in crystalline quartz as a result of increasing the plate thickness by 2 mm.

convenient when measurements involve temperature variations.

The absorption coefficient of crystalline quartz was measured on an Epsilon submillimeter BWT spectrometer [23]. Two Fabry–Perot interferometers were made by depositing identical meshworks onto two plane-parallel Z-cut crystalline quartz plates 2 and 4 mm thick. Figure 6 shows the transmission spectra of the interferometers. The substantial decrease in the amplitude of the maxima in the spectrum of the thicker resonator is fully determined by dielectric losses in quartz. Calculations based on these spectra give an absorption coefficient k of 0.0002. Note that the transmission spectra of the samples without deposited meshworks are almost insensitive to such low losses in this spectral region.

To summarize, the use of multibeam interferometers is an effective method of increasing the accuracy of measuring the dielectric spectra of conductors, superconductors, and radiotransparent materials at submillimeter wavelengths.

The work was sponsored by the Physics and Advanced Technologies Foundation.

REFERENCES

1. B. J. Kerridge, *Proc. SPIE,* vol. 2104, p. 13, 1993.
2. G. E. Peckham and R. A. Suttie, *Proc. SPIE,* vol. 2104, p. 10, 1993.
3. J. R. Birch and P. Q. Quince, *Proc. SPIE,* vol. 2104, p. 156, 1993.
4. A. K. Wan Abdullah and T. J. Parker, *Infrared Phys.,* vol. 29, p. 799, 1989.
5. M. N. Afsar and K. J. Button, *Int. J. Infrared and Millimeter Waves,* vol. 2, p. 1029, 1981.
6. K. N. Yang, P. L. Richards, and Y. Shen, *Appl. Phys. Lett.,* vol. 19, p. 320, 1971.
7. L. Xu, X.-C. Zhang, and D. H. Auston, *Appl. Phys. Lett.,* vol. 61, no. 15, p. 1784, 1992.
8. P. R. Smith, D. H. Auston, and M. C. Nuss, *IEEE J. Quant. Electron.,* vol. 24, no. 2, p. 255, 1988.
9. Ch. Fattinger and D. Grischkowsky, *Appl. Phys. Lett.,* vol. 53, no. 16, p. 1480, 1988.
10. M. C. Nuss, K. W. Goossen, J. P. Gordon, et al., *J. Appl. Phys.,* vol. 70, no. 4, p. 2238, 1991.
11. M. C. Nuss, K. W. Goossen, P. M. Mankiewich, and M. L. O'Malley, *Appl. Phys. Lett.,* vol. 58, no. 22, p. 2561, 1991.
12. M. C. Nuss, P. M. Mankiewich, M. L. O'Malley, et al., *Phys. Rev. Lett.,* vol. 66, no. 25, p. 3305, 1991.
13. D. Grischkowsky, S. Keiding, M. van Exter, and Ch. Fattinger, *J. Opt. Soc. Am.,* vol. 7, no. 10, p. 2006, 1990.

14. N. Katzenellenlogen and D. Grischkowsky, *Appl. Phys. Lett.*, vol. 61, no. 7, p. 840, 1992.
15. W. J. Walecki, D. Some, V. G. Kozlov, and A. V. Nurmiko, *Appl. Phys. Lett.*, vol. 63, no. 13, p. 1809, 1993.
16. D. Grischkowsky and S. Keiding, *Appl. Phys. Lett.*, vol. 57, no. 10, p. 1055, 1990.
17. Y. Konishi, M. Kamegawa, M. Case, et al., *Appl. Phys. Lett.*, vol. 61, no. 23, p. 2829, 1992.
18. D. W. Van der Weide, J. S. Bostak, B. A. Auld, and D. M. Bloom, *Appl. Phys. Lett.*, vol. 62, no. 1, p. 22, 1992.
19. M. B. Golant, R. L. Vilenskaya, U. A. Zyumina, et al., *Prib. Tekh. Eksp.*, no. 4, p. 136, 1965.
20. M. B. Golant, Z. T. Alekseenko, Z. S. Korotkova, et al., *Prib. Tekh. Eksp.*, no. 3, p. 231, 1969.
21. A. A. Volkov, Yu. G. Goncharov, G. V. Kozlov, et al., *Infrared Phys.*, vol. 25, no. 1, 2, p. 369, 1985.
22. A. A. Volkov, Yu. G. Goncharov, G. V. Kozlov, and S. P. Lebedev, *Elektron. Tekh., Ser. 1: Elektron. SVCh*, no. 11, p. 38, 1984.
23. G. V. Kozlov, ed., *Proceedings of the Institute of General Physics, Academy of Sciences of the USSR. Vol. 25. Submillimeter Dielectric Spectroscopy of Solids* (in Russian), Moscow, 1990.
24. P. Goy, M. Gross, and F. Beck, *Proc. SPIE*, vol. 2104, p. 487, 1993.
25. G. A. Blake, K. B. Laughlin, R. C. Cohen, et al., *Rev. Sci. Instr.*, vol. 62, no. 7, p. 1693, 1991.
26. K.-L. Barth and F. Keilmann, *Z. f. Phys. B*, vol. 91, p. 419, 1993.
27. A. A. Volkov, N. A. Irisova, and G. V. Kozlov, *Opt. Spektrosk.*, vol. 40, no. 2, p. 386, 1976.
28. A. A. Volkov, B. P. Gorshunov, Yu. G. Goncharov, et al., *Int. J. Mod. Phys.*, vol. 1, no. 3, 4, p. 219, 1987.
29. L. Genzel, M. Bauer, H.-U. Habermeir, and E. H. Brandt, *Z. f. Phys. B*, vol. 90, p. 3, 1933.
30. P. Wiese, X. Riederer, J. Schutzmann, et al., *Int. J. Infrared and Millimeter Waves*, vol. 13, p. 65, 1992.
31. A. A. Volkov, B. P. Gorshunov, G. V. Kozlov, et al., *Zh. Eksp. Teor. Fiz.*, vol. 103, no. 7, p. 1, 1993.
32. B. P. Gorshunov, G. V. Kozlov, O. I. Sirotinskii, and I. M. Chernyshev, *Kr. Soobshch. po Fiz. FIAN*, no. 10, p. 25, 1991.
33. R. N. Clarke and C. B. Rosenberg, *J. Phys. E: Sci. Instrum.*, vol. 15, p. 9, 1982.